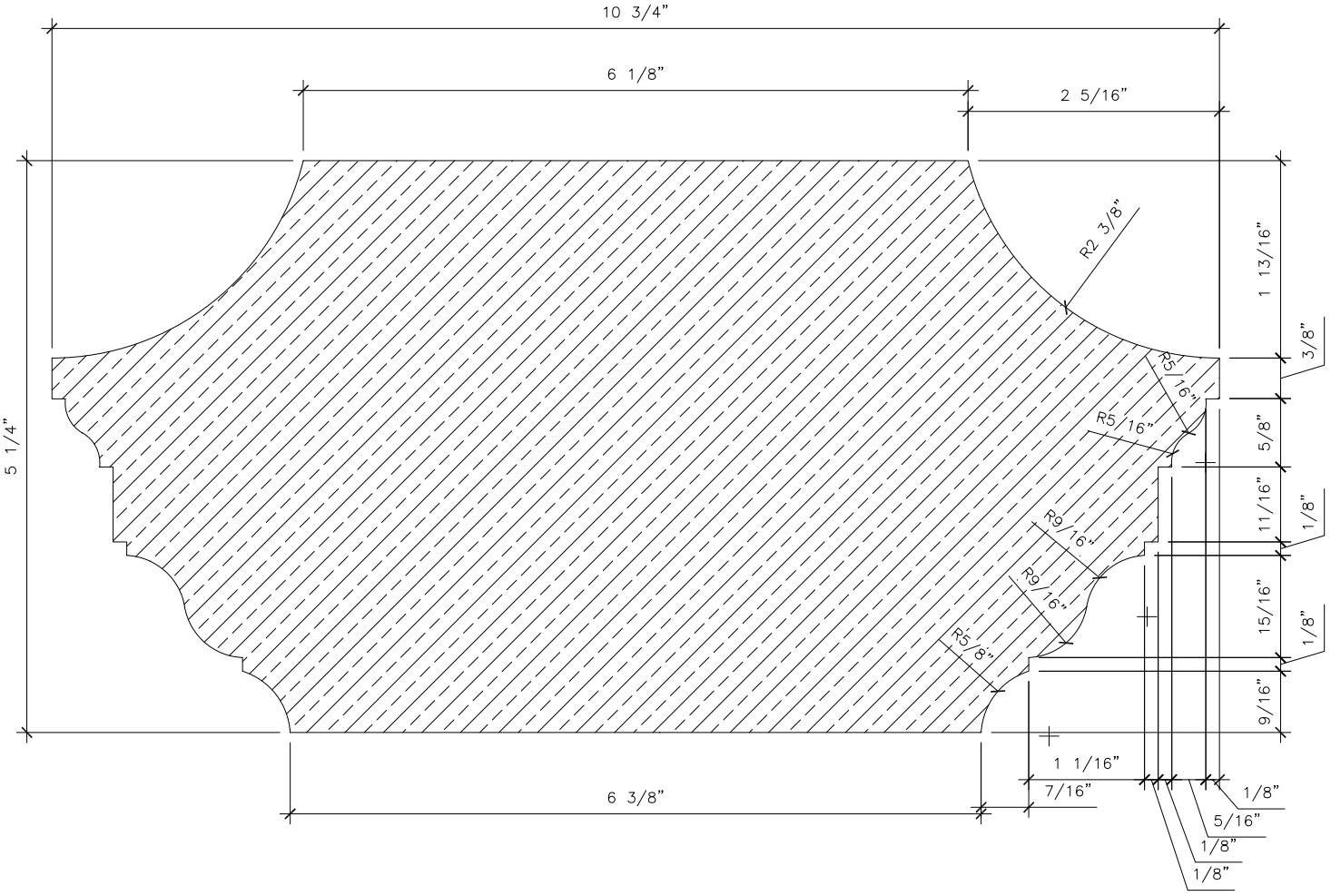

1 PROFILE 850-HRC

SCALE: NTS

AMERICAN LIMESTONE COMPANY
A TEXAS CORPORATION
1905 MARILLA, DALLAS, TX 75201
PHONE (214) 747-2636 FAX (214) 747-2639

PROFILE 850-HRC IONIC

SUPPLIED IN 4'-3" LENGTHS

2.4.35

© COPYRIGHT 1994 AMERICAN LIMESTONE COMPANY • ALL RIGHTS RESERVED • UNITED STATES PATENT PENDING